NET RETURN

NO FLY ZONE

Assembly Instructions

The information in this document is subject to change without notice. © Copyright The Net Return™ 2007, 2025. All rights reserved.

750606

Read all the warnings before you assemble and use the sports net.



Be sure that you orient your net properly. The Net Return logo always faces the athlete.

Avoid exposing your net to prolonged ultraviolet light as this may fade and/or degrade the sleeve fabric. When not in use, move to a shaded area.

Maintain a safe clearance around and above your net. When orienting your net, consider the surrounding area. Athletes are responsible for injury or damage caused by a mis-hit ball.

Do not hang, kick, cut or climb on your net. Avoid contacting the net with any sporting equipment other than a ball.



Danger of tipping over! Always weight base with sandbags.

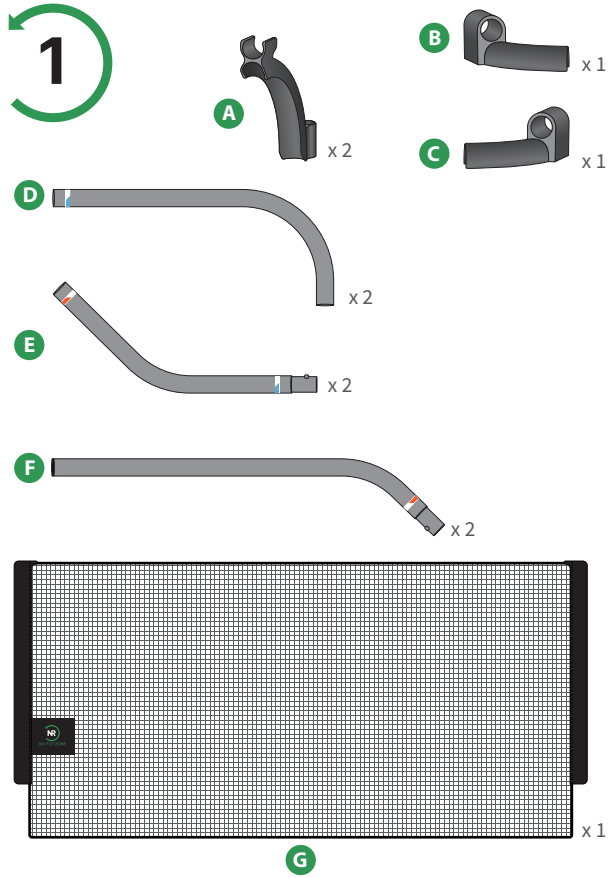

- Lay out the parts as shown.

NOTE: Throughout this manual, certain images contain parts that have been colored yellow. This is meant to bring attention to a specific step and is not a representation of their actual color.

2

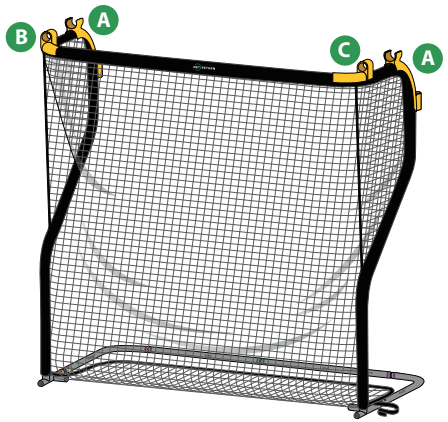

TIP: If it is easier, gently lay your net on its back to complete this step.

- Snap the two A brackets to the back of the frames. These two brackets are identical and can be interchanged.
- Snap the B and C brackets to the front corner of the frames. Note that there is a left and right bracket, which must be installed per the image above.

3

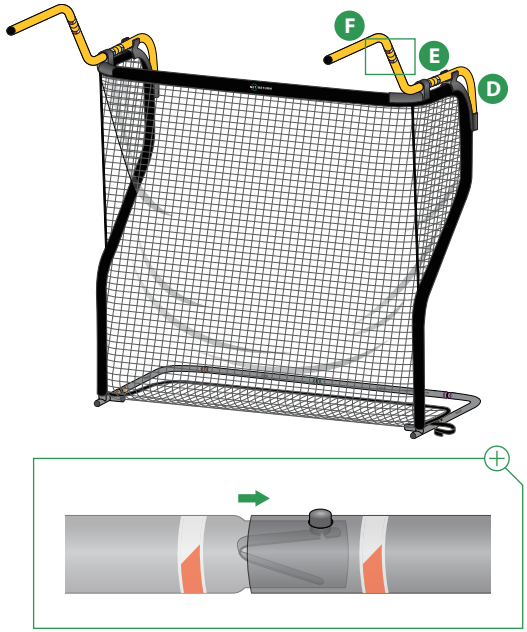

- Frame sections are assembled by connecting the D, E, and F frames. Join the frame ends together by matching the color stripes.
- Frame F must pass through the B or C bracket before connecting to frame E.

TIP: Ensure the D frames are fully seated into the A brackets.

4



- Carefully slide the G net over the two frame sections. Take note of the correct location of the logo.
- There are two laces on the side of your net. Carefully tie each of these to your net.
- You have successfully installed the Net Return No Fly Zone.